CVI 1080P DOME CAMERA

Image Sensor	2.0MP SONY CMOS Image Sensor
Signal	PAL / NTSC
Effective Pixels	1920(H)1080(V)
Min. Illumination	0.01Lux@（F1.2,AGC ON）,0 Lux with IR
Shutter	1/50s-1/50000s 1/60s-1/60000s
Video Frequency	1920×1080@25fps ； 1920×1080@30fps
	1280×960@25 fps ； 1280×960@30 fps
	1280×720@25 fps ； 1280×720@30 fps
Synchronization	Internal
Video Output	CVI / CVBS
Noise Reduction	3D-DNR
OSD	Support coaxial control
AWB	ATW/MWB
Day/Night	IR cut filter with auto switch
Transmission Distance	Over 500m via 75-3 coaxial cable
Power Supply	DC 12V±10%
Working Environment	-10°C~+55°C/Less than 95%RH(no condensation)
Power Consumption	8W MAX

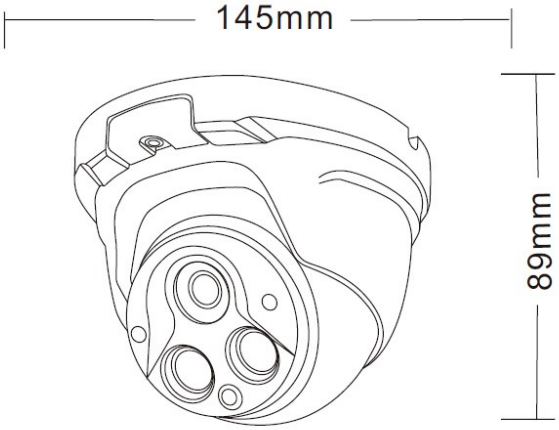

2M High Definition
2pcs Array IR Led,
IR Range: 40m
2.8-12mm Lens
Built-in IR-CUT, Low power consumption

CVI 1080P BULLET CAMERA

Sensor	2.0 MP SONY CMOS Image Sensor
Image Resolution	25/30fps@1080P
Mini Illumination	0Lux /IR ON
S/N Ratio	>55dB
Video Output	CVI
Transmission Distance	Over 300m via 75-3 coaxial cable
AGC	Auto
Back Light	OFF; BLC
Shutter	1/50s~1/30,000s; 1/60s~1/30,000s
White Balance	Manual/Auto
OSD	DVR remote
Mirror	ON; OFF
Day/Night	Auto(ICR) / Color / B/W
Sync Mode	Internal
Voltage	12VDC±10%
Lens	2.8-12mm vari-focal HD lens (6-22mm optional)
Max. IR LEDs Length	50m, Smart IR
Weatherproof Standard	IP66
Operation Temp	-10°C~+50°C / Less than 95%RH (no condensation)
Storage Temp	-20°C~+70°C
Dimension(mm)	261mm*118mm*76mm
Weight	865g

2M High Definition
6pcs Array IR Led
IR Range: 50m
2.8-12mm Lens
Built-in IR-CUT

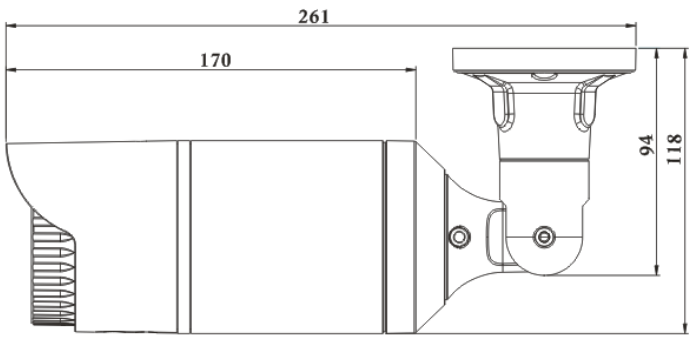

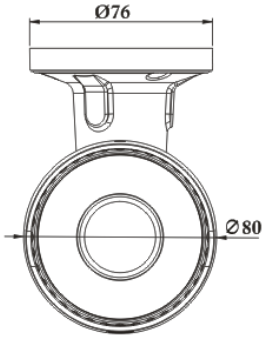

CVI 1080P BULLET CAMERA

Image Sensor	2.0MP SONY CMOS Image Sensor
SIGNAL	PAL / NTSC
Effective Pixels	1920(H)1080(V)
Min. Illumination	0.01Lux@（F1.2,AGC ON）,0 Lux with IR
Shutter	1/50s-1/50000s 1/60s-1/60000s
Video Frequency	1920×1080@25fps ； 1920×1080@30fps
	1280×960@25 fps ； 1280×960@30 fps
	1280×720@25 fps ； 1280×720@30 fps
Synchronization	Internal
Video Output	CVI / TVI / AHD / CVBS
Noise Reduction	3D-DNR
OSD	Support coaxial control
AWB	ATW/MWB
Day/Night	IR cut filter with auto switch
Transmission Distance	Over 500m via 75-3 coaxial cable
Power Supply	DC 12V±10%
Working Environment	-10°C~+55°C/Less than 95%RH(no condensation)
Power Consumption	8W MAX

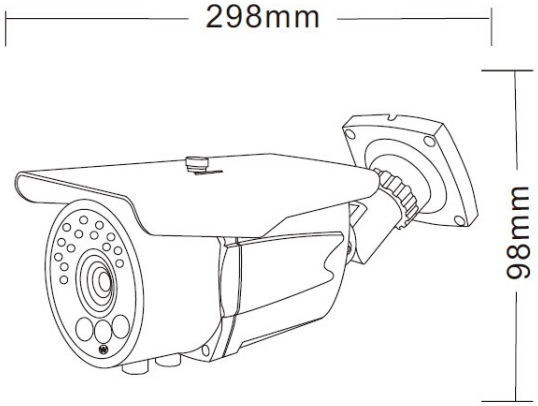

2M High Definition
3pcs Array IR and 14pcs Piranha Led
IR Range: 60m
2.8-12mm Lens
Built-in IR-CUT, Low power consumption